Safety is a Part of Your Contract

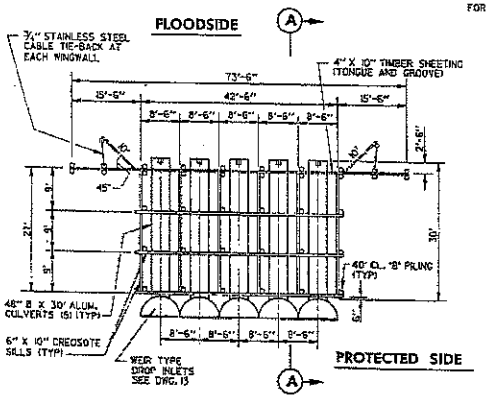

PLAN
5 CULVERTS
STA. 99 + 00
SCALE : 1" = 10'-0"

NOTE: FLAP GATES NOT SHOWN FOR CLARITY. SEE DWG. 13

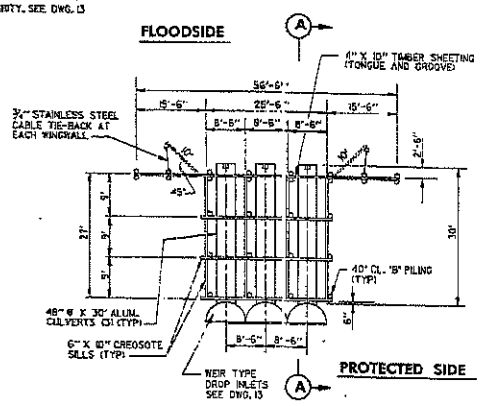

PLAN
3 CULVERTS
STA. 196 + 00
SCALE : 1" = 10'-0"

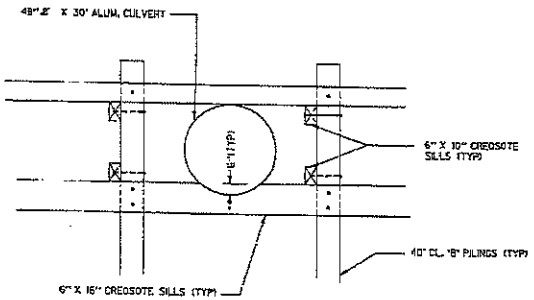

SECTION (B)
TYPICAL LOWER CULVERT SUPPORT BEAM
SCALE : 1/2" = 1'-0"

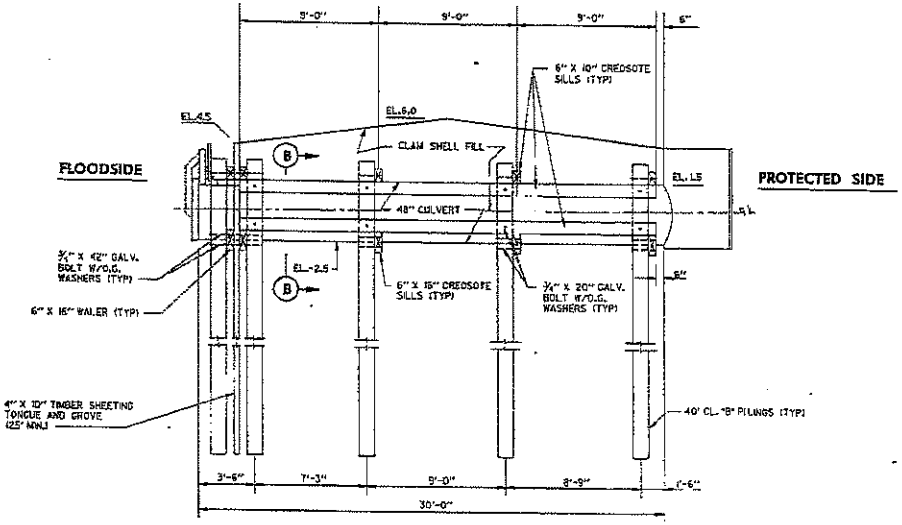

SECTION (A)
SCALE : 1" = 10'-0"

NOTES:

1. ALL ALUMINUM FLAT BARS AND PLATES TO BE ALLOY 5086-H34.
2. CORRUGATED ALUMINUM PIPE TO BE 1/2" X 2 2/3" ANNULAR CORRUGATIONS, 8 GAUGE, ALLOY 3004-H34.
3. ALL STAINLESS STEEL BOLTS, NUTS, AND WASHERS SHALL BE ALLOY A.I.S.I. TYPE 316.
4. "J-SEAL" TO BE HUNTINGTON #3625 SOLID BULB TYPE FULLY VULCANIZED TO FIT 48" Ø ALUMINUM PIPE.

SCALE: 1/2" = 1'- 0"

SCALE: 1" = 10'

C-A-D

REVISION	DATE	DESCRIPTION	BY

U. S. ARMY ENGINEER DISTRICT, NEW ORLEANS
CORPS OF ENGINEERS
NEW ORLEANS, LOUISIANA

LAKES TO DULUCH STADIUM
HURRICANE PROTECTION PROJECT
MITIGATION LEVEE, FIRST LIFT
POINTE-AU-CHEN WILDLIFE MANAGEMENT AREA
LOUISIANA PARISH

WATER CONTROL STRUCTURES

DESIGNED: SJH
DRAWN: JCH
CHECKED: DRV
SUBMITTED:
DATE: X
PLOT SCALE: 120
DESIGN FILE: 30706-07
SPEC. NO. DACW29-X
FILE NO. H-8-30706
DWG. 11 OF 18

Exhibit 6

Safety is a Part of Your Contract

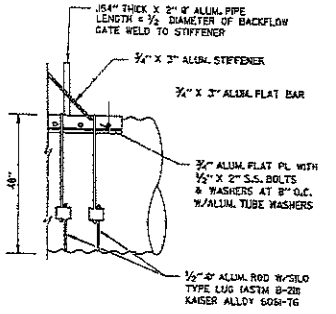

SIDE VIEW OF REAR PORTION OF FLAP GATE

SCALE : ¾"=1'-0"

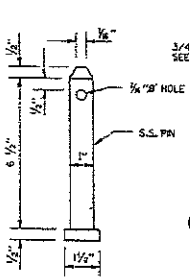

DETAIL ① LOCK PIN

SCALE : 6"=1'-0"

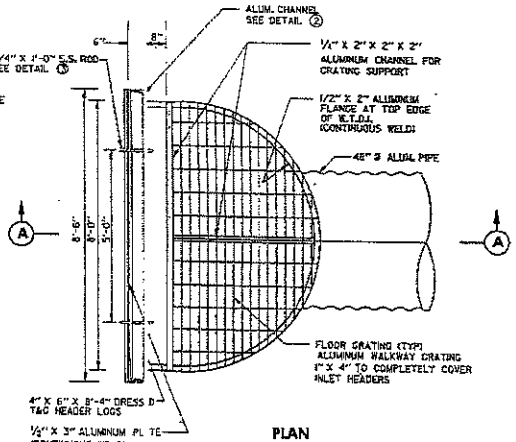

PLAN

WEIR TYPE DROP INLET (W.T.D.I.)

SCALE : ¾"=1'-0"

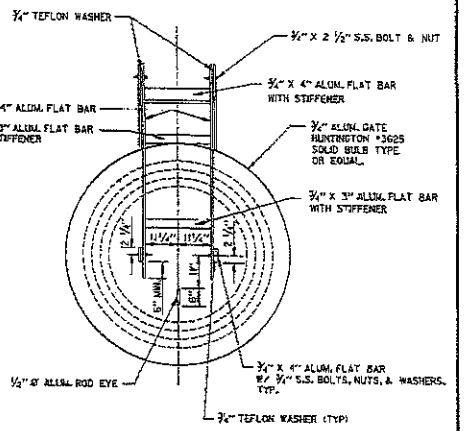

END VIEW OF FLAP GATE

SCALE : ¾"=1'-0"

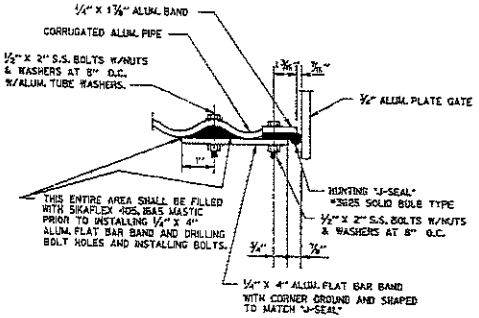

"J-SEAL" DETAIL

SCALE : 3"=1'-0"

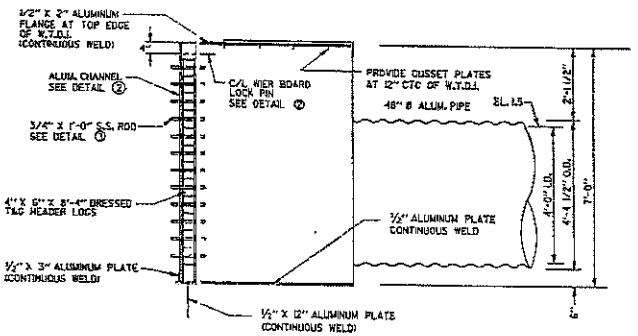

SECTION (A)

SCALE : ¾"=1'-0"

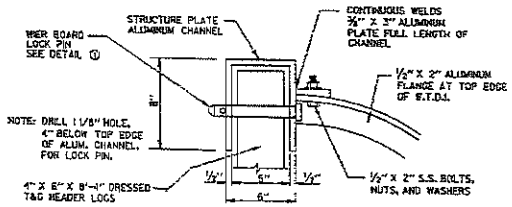

DETAIL ② WEIR TYPE DROP INLET CHANNEL DETAIL

SCALE : 3"=1'-0"

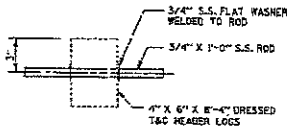

DETAIL ③

SCALE : 3"=1'-0"

SCALE: ¾" = 1'- 0"

SCALE: 3" = 1' - 0"

SCALE: 6" = 1" - 0"

REVISION	DATE	DESCRIPTION	BY

U. S. ARMY ENGINEER DISTRICT, NEW ORLEANS
CORPS OF ENGINEERS
NEW ORLEANS, LOUISIANA

LAKE TO GOLDEN MEADOW
HURRICANE PROTECTION PROJECT
MITIGATION LEVEE, FIRST LIFT
POINTE-AU-CHIEN WILDLIFE MANAGEMENT AREA
LAFOURCHE PARISH, LA.

WATER CONTROL STRUCTURE DETAILS

DESIGNED: SJM DRAWN: JDC CHECKED: DRV	DATED: X PLOT SCALE: 16 CREATION FILES (MICROSTN)		FILE NO. H-8-30706
SUBMITTED:	APPROVED: DACW29-X		DWG. 12 OF 16